Fireplace with Mantel
Model Number: 1819407COM
Finish: Matte Black

Ameriwood™ HOME

OVERALL PRODUCT SIZE(in inches)

Fireplace:58"(W)*17.7"(D)*24.1"(H)

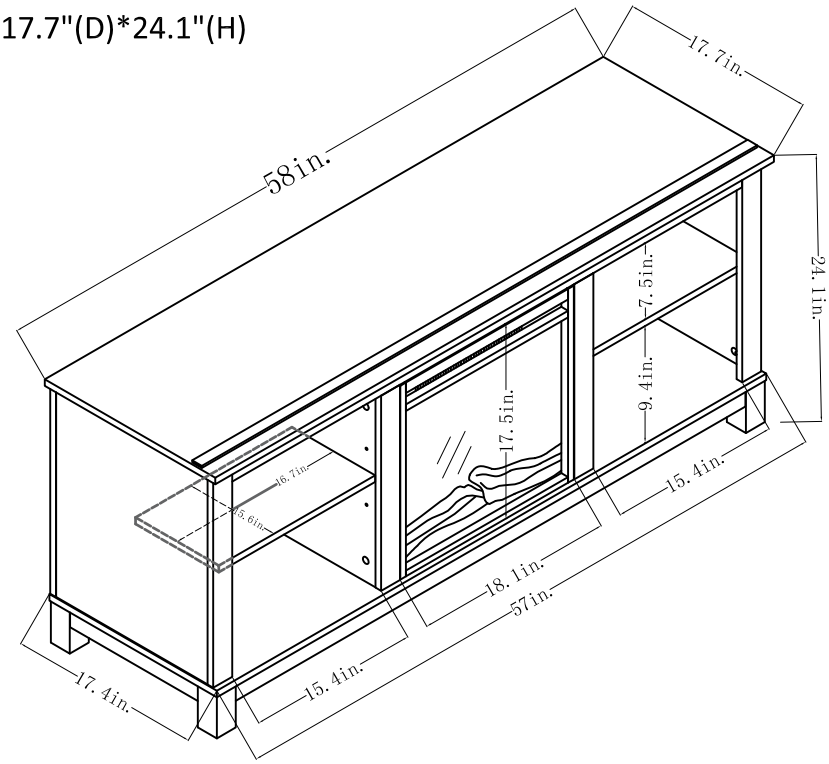
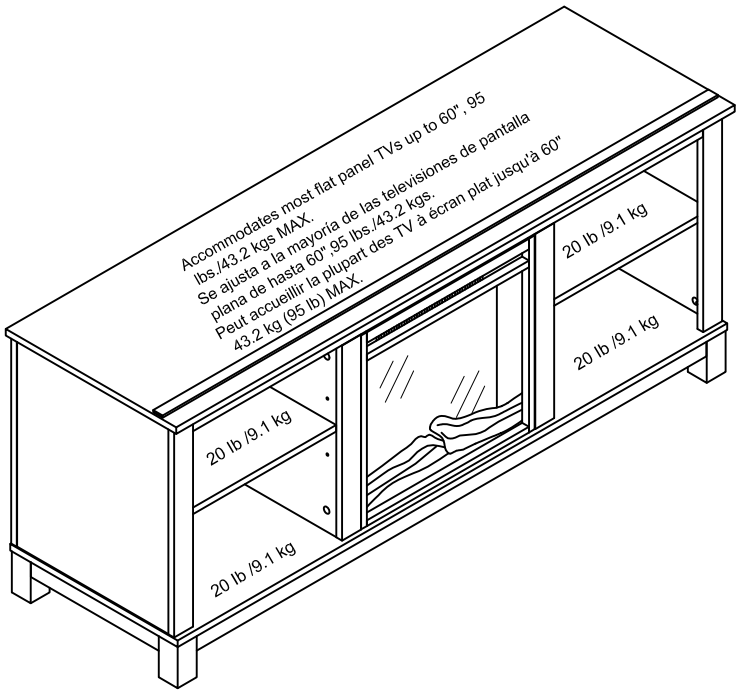
MAXIMUM WEIGHT CAPACITIES